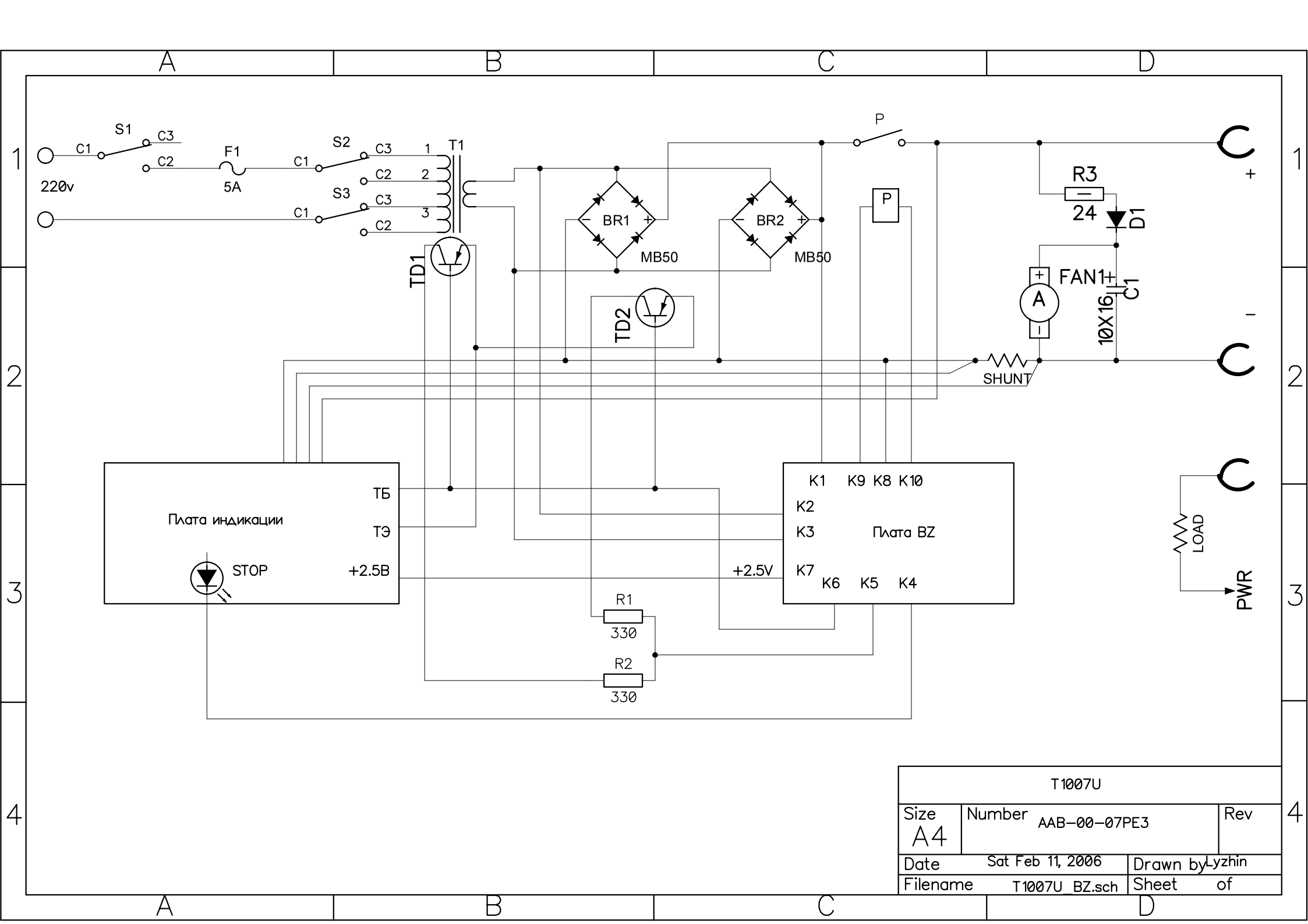
A
B
C
D
1
2
3
4
S1
C1
C3
C2
220v
F1
5A
S2
S3
T1
TD1
TD2
BR1
MB50
BR2
MB50
P
R3
24
D1
FAN1
A
C1
10X16
SHUNT
+
-
LOAD
PWR
Плата индикации
ТБ
ТЭ
+2.5В
STOP
+2.5V
K1 K9 K8 K10
K2
K3
Плата BZ
K7
K6 K5 K4
R1
330
R2
330
T1007U
Size
A4
Number
AAB-00-07PE3
Rev
Date
Sat Feb 11, 2006
Drawn by
Lyzhin
Filename
T1007U_BZ.sch
Sheet
of